Data Center Security for Virtual Environments

SDDC Workload Integrity and Malware Protection

By Symantec and VMware

Fully automated and dynamically scalable solution workflow

Advanced service-based data center workload protections

Native VMware NSX integration for virtual networks, workloads and services

Enterprise guest workload integrity with reputation and signature based malware protection

Extensible by Symantec and the NSX solution ecosystem

Unified console extensibility for additional Symantec agent-based guest protections

Solution Description

Symantec and VMware collaboration delivers integrity and protection for trusted workloads in the enterprise virtualized network, on the NSX platform. Symantec protection is delivered as an agentless service, on the NSX platform, managed cooperatively in the NSX ecosystem.

VMware NSX networking and security platform is a key element of VMware's vision for virtualized networks in the Software Defined Data Center.

Overview of Symantec Protection on NSX

Protection for VMware-based virtual environments is the foundation for Symantec's Data Center Security solutions, including:

- Virtual Machine security via agentless anti-virus/anti-malware (AV/AM) security services deployed as virtual appliances (SVA) for the virtualized network, via NSX.
- Security as a Service provisioning via NSX Service Composer.
  - Supports automation for security service registration and deployment to the VMware infrastructure.
  - Protection follows workload across virtualized networks.
  - Automated, cooperative NSX security ecosystem workflow supported via Service Composer.
- Protections for ESXi monitoring and vCenter Server hardening.

Joint Solution Benefits

- Reduces resource impact (i.e. scan/update storms) associated with scanning and definition file updates.
- Reduces security-provisioning time by facilitating deployment from within the VI Admin's consoles.
- Single instance security service per host integrated with the security ecosystem.

Copyright © 2013 Symantec Corporation. All rights reserved. Symantec and the Symantec Logo are trademarks or registered trademarks of Symantec Corporation or its affiliates in the U.S. and other countries. Other names may be trademarks of their respective owners.
This document is provided for informational purposes only and is not intended as advertising. All warranties relating to the information in this document, either express or implied, are disclaimed to the maximum extent allowed by law. The information in this document is subject to change without notice.

Symantec Protection for VMware

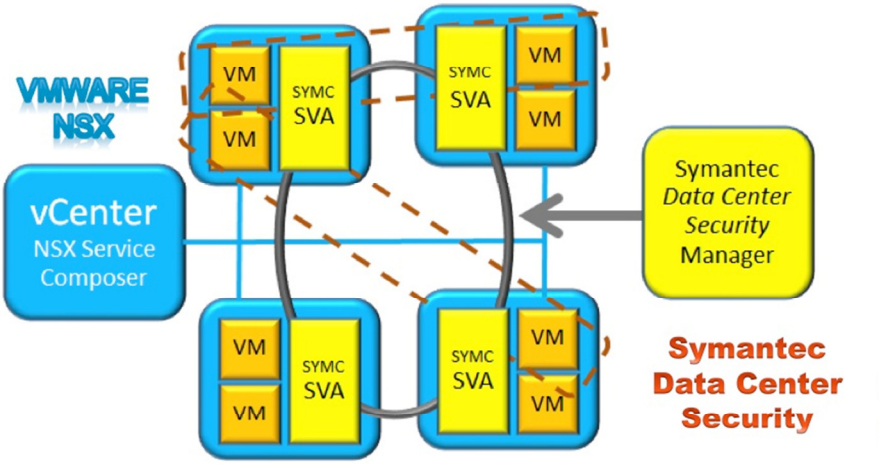

Symantec Data Center Security for VMware NSX allows security administrators cooperative, role-based access to the policy and reporting controls for enterprise virtualized networks and hybrid cloud infrastructure.

Native access to data and controls provided by network virtualization offer better control with more flexibility.

Solution Overview

Copyright © 2013 Symantec Corporation. All rights reserved. Symantec and the Symantec Logo are trademarks or registered trademarks of Symantec Corporation or its affiliates in the U.S. and other countries. Other names may be trademarks of their respective owners.
This document is provided for informational purposes only and is not intended as advertising. All warranties relating to the information in this document, either express or implied, are disclaimed to the maximum extent allowed by law. The information in this document is subject to change without notice.